DO NOT SCALE WORK TO FIGURED DIMENSIONS ONLY
ALL EXISTING DIMENSIONS TO BE CHECKED ON SITE
DRAWN ON AUTOCAD R14 AT STRIDE TREGLOWN GROUP PLC
PLOT SCALE....
XREF....
LAYERS ON THIS DRAWING COMPLY WITH BS 1192: PART 5

Note:

Information taken from record drawings - not subject to survey

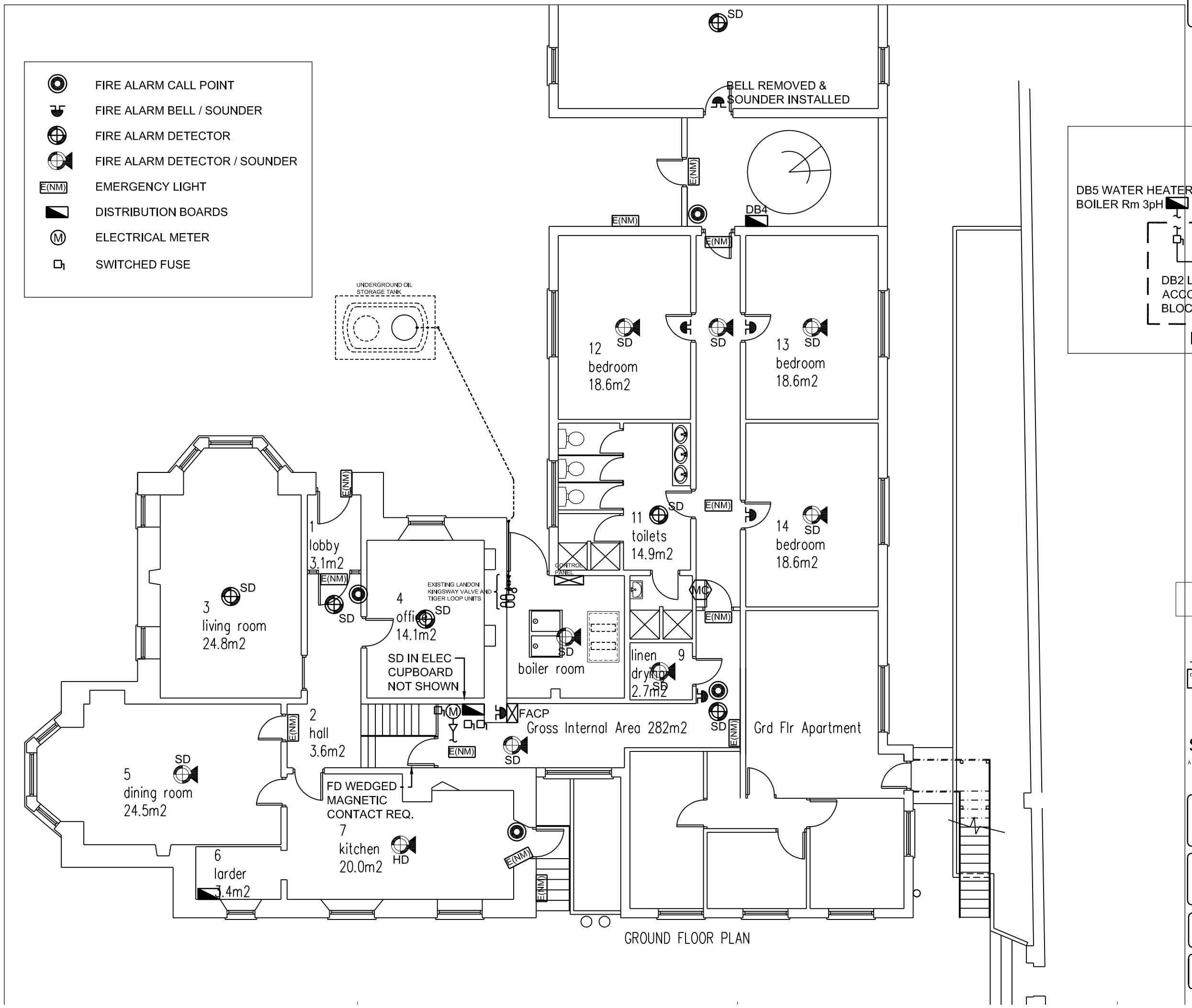

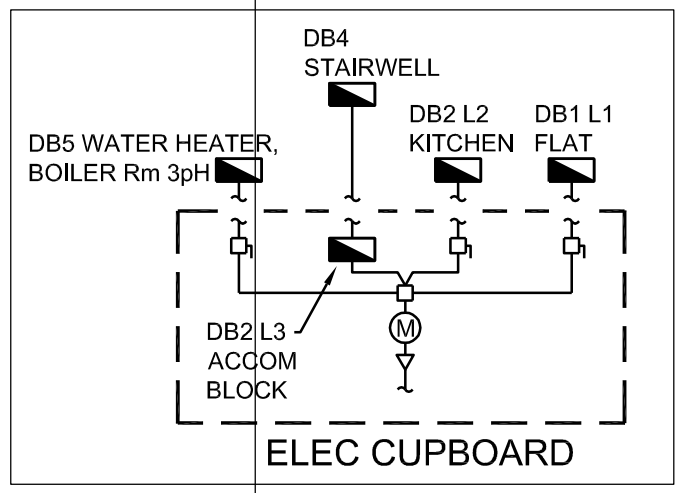

-	-	PP	DTK	Record Drawing
date	rev	name	chk	note

STRIDE TREGLOWN

Architecture TownPlanning InteriorDesign BuildingSurveying GraphicDesign

11 The Crescent, Plymouth, PL1 3AB
Tel:(01752)202088 Fax:(01752)202089

PROJECT
ISLES OF SCILLY
ASSET MANAGEMENT PLAN

DRAWING TITLE
MUNDSLEY HOSTEL
FIRST FLOOR PLAN
FIRE ALARM & EMERG. LIGHT LAYOUTS

SCALE	DATE	DRAWN BY	CHECKED BY
1:100	02/02/12		

DRAWING NUMBER	REVISION	DRAWN ON ACAD 2000
020212/M/01	-	