© Copyright James Lockyer Associates

NOTES:

1. Do not scale, check all dimensions and details before commencement.
2. IF IN DOUBT ASK.
3. This drawing is to be read in conjunction with all other relevant Contract Documents.

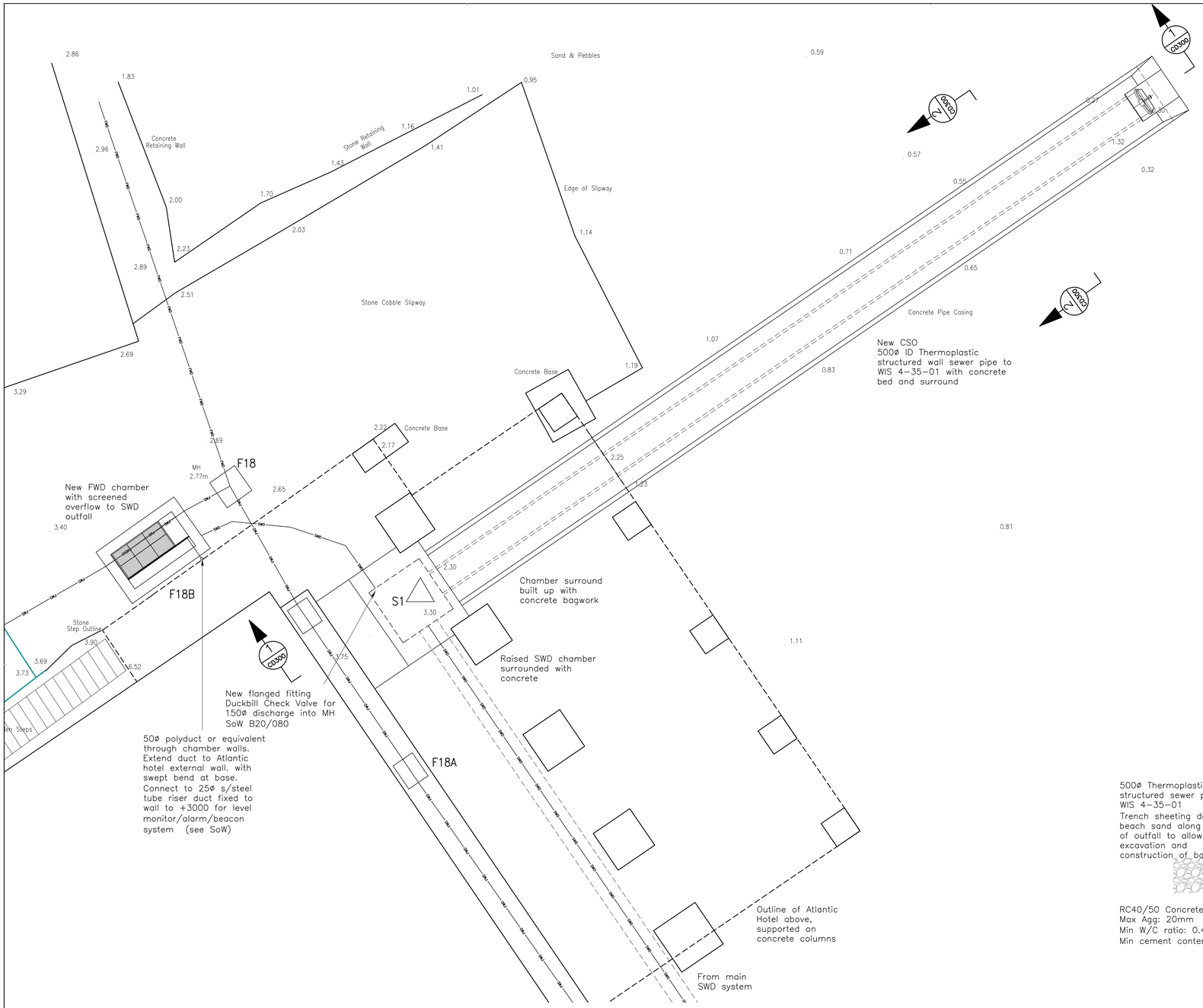

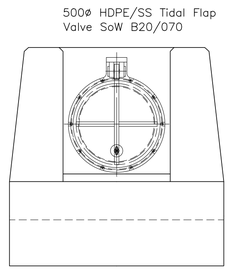

VIEW ON OUTFALL
1:20

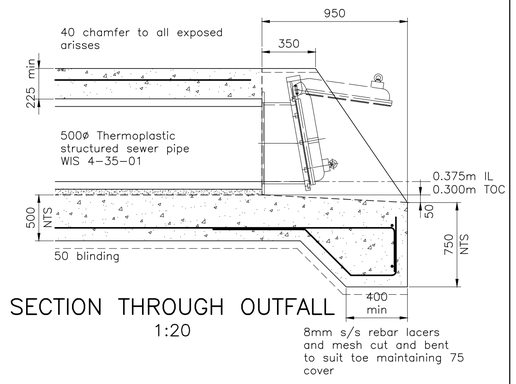

SECTION THROUGH OUTFALL
1:20

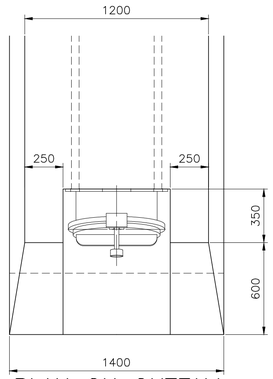

PLAN ON OUTFALL
1:20

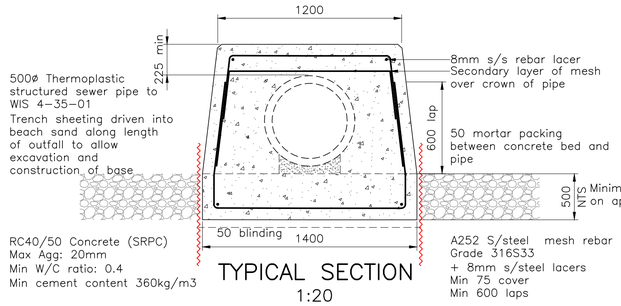

TYPICAL SECTION
1:20

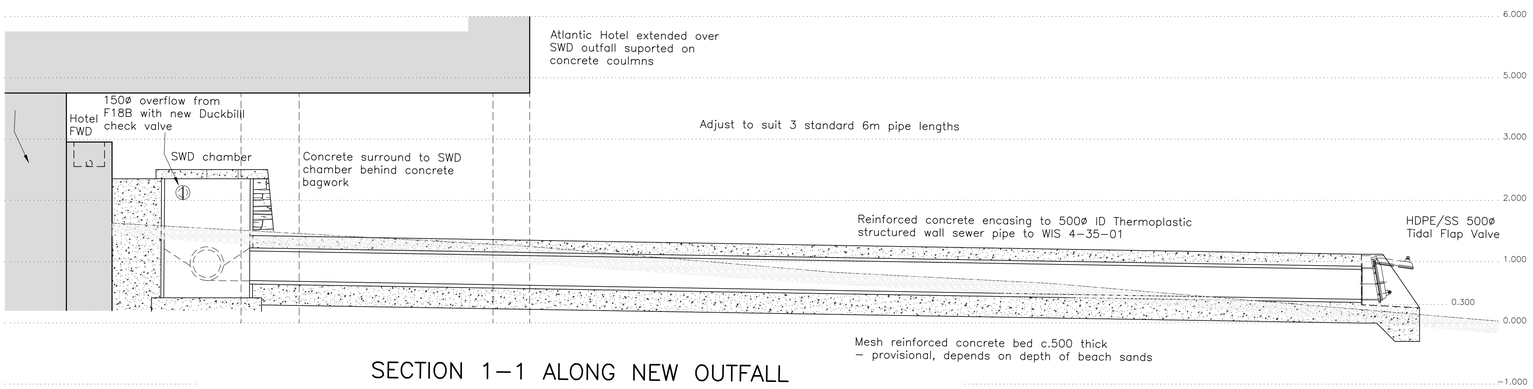

SECTION 1–1 ALONG NEW OUTFALL
1:50

Amdt.		Date
F	UPDATED TENDER DRAWING	26.05.16
E	TENDER DRAWING	25.01.15
D	SUPPORT WEIR AMENDED	11.07.14
C	TENDER DRAWING	04.07.14
B	ORIGINAL TENDER DRAWING	20.07.12
A	PRELIMINARY – REPORT ISSUE	30.05.12

v4.0

JLA
CONSULTING ENGINEERS
CONSTRUCTIVE ADVICE, CONSIDERED SOLUTIONS
Oakland Mews, Liskeard Business Park, Liskeard, Cornwall, PL14 3UX
T: 01579 344771
F: 01579 344882
E: post@jameslockyer.co.uk

Project
INFRASTRUCTURE WORKS
ST MARY'S
ISLES OF SCILLY
ATLANTIC HOTEL OUTFALL

Title
PROPOSED OUTFALL

Client
COUNCIL for the IOS

Date	Scale @ A1	Cad Ref.
19.05.12	AS SHOWN	4606CD301
Designed	Drawn	Checked
	JWL	

Drawing Number	Rev 26/05/2016 16:
4606/CD/301	F